DOC022.52.80719

TenSette Pipet, 1–10 mL, 1970010

04/2025, Edition 1

User Manual

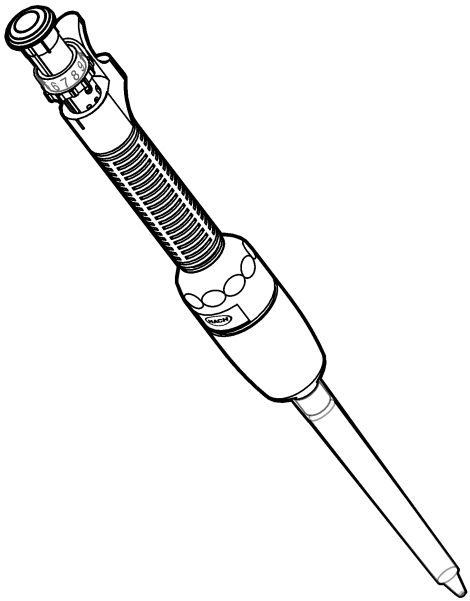

Section 1 Product overview ... 3
Section 2 Specifications ... 3
Section 3 General information ... 3
3.1 Safety information ... 4
3.2 Use of hazard information ... 4
3.3 Intended use ... 4
Section 4 Product components ... 5
Section 5 Operation ... 5
5.1 Guidelines ... 5
5.2 TenSette pipet procedure ... 6
5.3 Verify the accuracy ... 7
Section 6 Maintenance ... 7
6.1 Clean the device ... 7
6.2 Lubricate the piston ... 7
6.3 Calibration ... 10
Section 7 Parts and accessories ... 11

Section 1 Product overview

The TenSette Pipet is an adjustable pipet for easy measurement of liquid volumes. The pipet uses disposable tips to prevent contamination. The user can select a volume from 1.0 mL to 10.0 mL in 1.0-mL increments. Refer to Figure 1.

Figure 1 TenSette Pipet

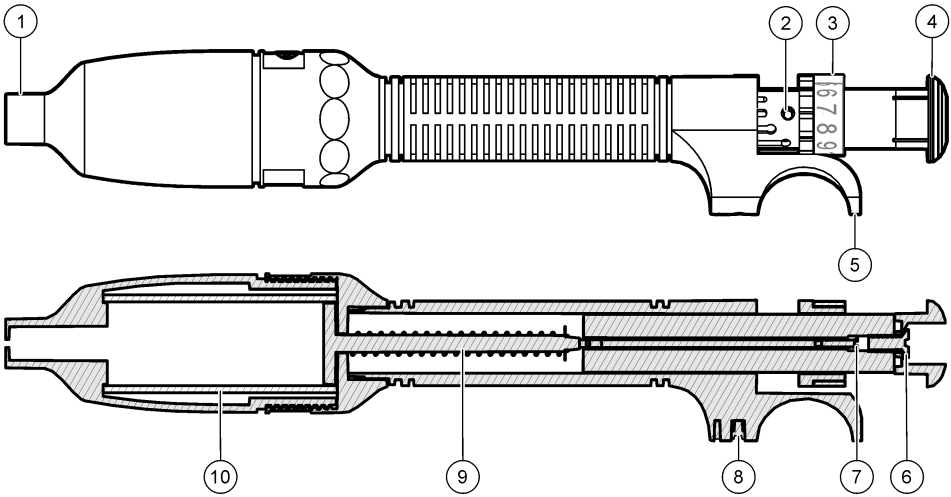

1 Cone	**6** Turret cap screw
2 Turret set screw, 6-32 x 0.125 inch	**7** Turret adjustment screw
3 Volume-setting ring	**8** Set screw, 8-32 x 0.188 inch
4 Turret cap	**9** Piston assembly
5 Finger rest	**10** Cylinder

Section 2 Specifications

Specifications are subject to change without notice.

Specification	Details
Material	Body: phenylene oxide; Tips: HDPE (high density polyethylene)
Type	Air displacement
Range	1.0 to 10.0 mL, adjustable in 1.0-mL increments
Reproducibility	±1.5% from 1.0 to 4.0 mL; ±1% from 5.0 to 10.0 mL
Operating temperature	68–77 °F (20–25 °C) for best accuracy
Warranty	1 year

Section 3 General information

In no event will the manufacturer be liable for damages resulting from any improper use of product or failure to comply with the instructions in the manual. The manufacturer reserves the right to make changes in this manual and the products it describes at any time, without notice or obligation. Revised editions are found on the manufacturer's website.

3.1 Safety information

The manufacturer is not responsible for any damages due to misapplication or misuse of this product including, without limitation, direct, incidental and consequential damages, and disclaims such damages to the full extent permitted under applicable law. The user is solely responsible to identify critical application risks and install appropriate mechanisms to protect processes during a possible equipment malfunction.

Please read this entire manual before unpacking, setting up or operating this equipment. Pay attention to all danger and caution statements. Failure to do so could result in serious injury to the operator or damage to the equipment.

If the equipment is used in a manner that is not specified by the manufacturer, the protection provided by the equipment may be impaired. Do not use or install this equipment in any manner other than that specified in this manual.

3.2 Use of hazard information

⚠ DANGER
Indicates a potentially or imminently hazardous situation which, if not avoided, will result in death or serious injury.

⚠ WARNING
Indicates a potentially or imminently hazardous situation which, if not avoided, could result in death or serious injury.

⚠ CAUTION
Indicates a potentially hazardous situation that may result in minor or moderate injury.

NOTICE
Indicates a situation which, if not avoided, may cause damage to the instrument. Information that requires special emphasis.

3.3 Intended use

The TenSette Pipet is intended for use by individuals who measure water quality parameters in the laboratory. The TenSette Pipet does not treat or alter water.

Section 4 Product components

Make sure that all components have been received. Refer to Figure 2. If any items are missing or damaged, contact the manufacturer or a sales representative immediately.

Figure 2 Product components

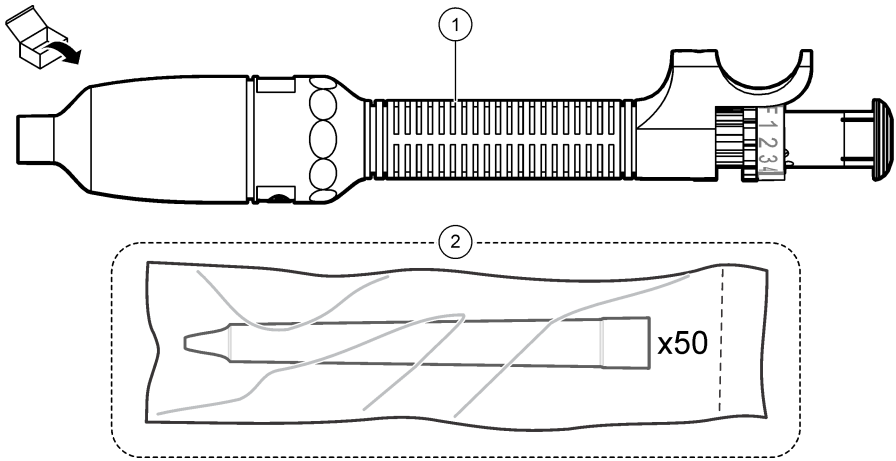

1 TenSette Pipet, 1.0 to 10.0 mL	**2** Pipet tips, pack of 50

Section 5 Operation

⚠ CAUTION

Chemical exposure hazard. Obey laboratory safety procedures and wear all of the personal protective equipment appropriate to the chemicals that are handled. Refer to the current safety data sheets (MSDS/SDS) for safety protocols.

5.1 Guidelines

Observe the guidelines that follow for best results:

- Always use a clean, new pipet tip for each pipet operation.
- Set the volume with the volume ring. The number on the ring must line up with the volume mark below the ring.
- Turn the turret cap to the next higher volume setting before the liquid in the pipet tip is dispensed into the receiving vessel. For example, if the volume is set to 5.0 mL, turn the turret cap to 6.0 mL, then dispense the liquid. When the volume is set to the maximum setting (10.0 mL), turn the turret cap to the "F" position.
- Use only the pipet tips that are supplied by the manufacturer.
- Use careful and smooth hand movements for best reproducibility.
- Hold the pipet approximately vertical when liquid is pulled into the pipet tip.
- Keep the tip approximately 5 mm (0.2 inches) below the surface of the solution when liquid is pulled into the pipet tip.
- Do not lay the pipet down with liquid in the tip to prevent leakage and possible corrosion.
- Use when the pipet, air temperature and the solution are between 20 and 25°C (68 and 77 °F) for best accuracy.
- Verify the volume that is dispensed with deionized or distilled water and an analytical balance. Refer to Verify the accuracy on page 7.

5.2 TenSette pipet procedure

Refer to Guidelines on page 5 and the steps that follow to use the TenSette pipet.

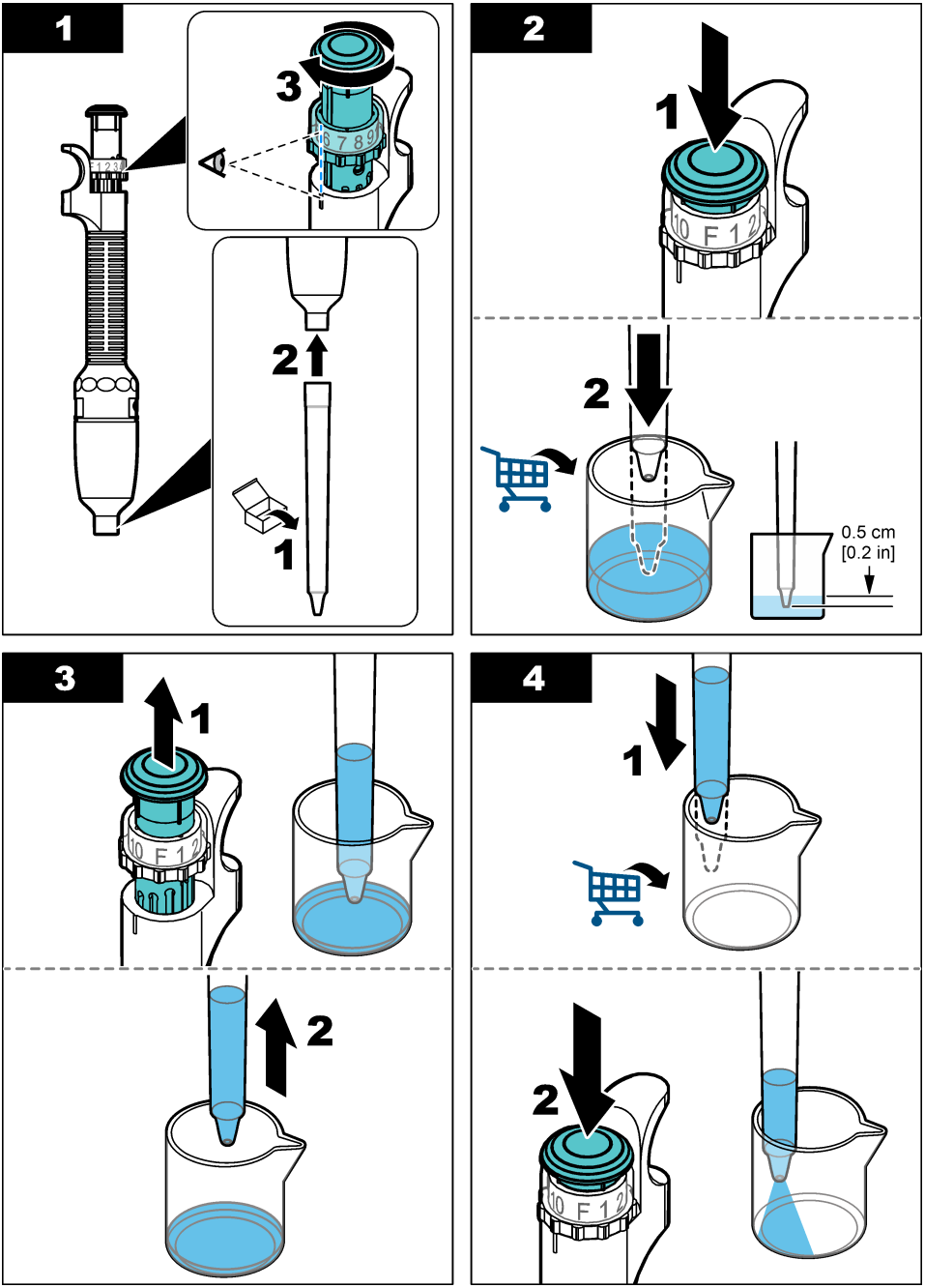

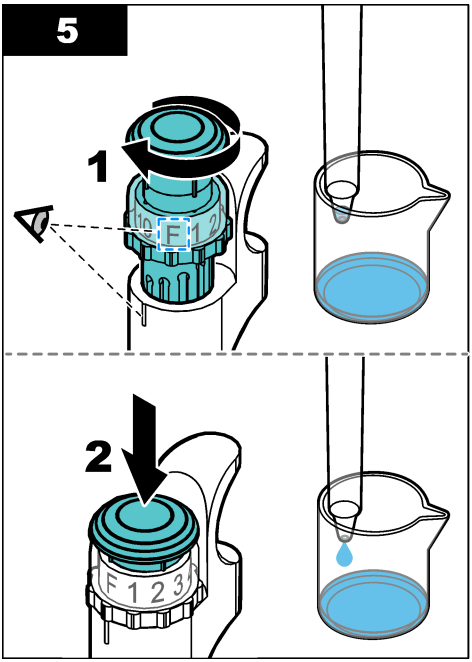

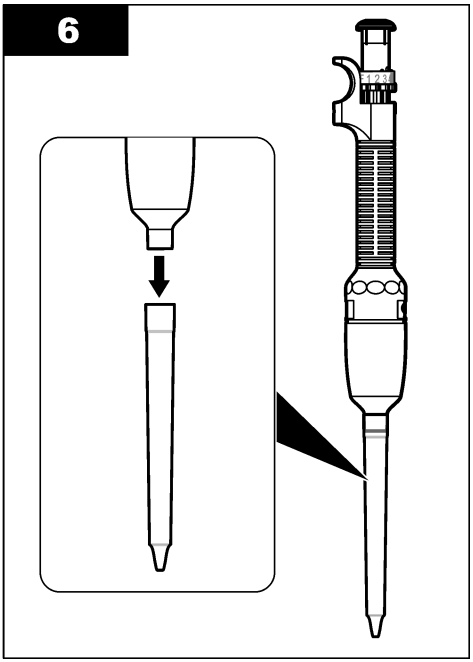

5.3 Verify the accuracy

Weigh the volume of distilled water that is dispensed by the pipet to verify the accuracy. Use only distilled or deionized water at 20–25 °C (68–77 °F). The weight of each mL of distilled or deionized water is 1 gram.

1. Put a narrow-necked vessel (for example, a 25-mL volumetric flask) on an analytical balance and zero the balance.
2. Use the TenSette pipet to add a volume of distilled water into the vessel.
3. Record the weight.
4. Compare the actual weight to the expected weight.
5. If the weight is not within the tolerance given in Specifications on page 3, calibrate the pipet. Refer to Calibration on page 10.

Section 6 Maintenance

6.1 Clean the device

Clean the external surfaces with a moist cloth and a mild soap solution and then wipe dry as necessary.

6.2 Lubricate the piston

After a long period of use, disassemble the lower part of the pipet and lubricate the piston to keep the pipet operation smooth. Use only hands to remove or tighten the components. Use stopcock grease for lubrication. Refer to the illustrated steps that follow.

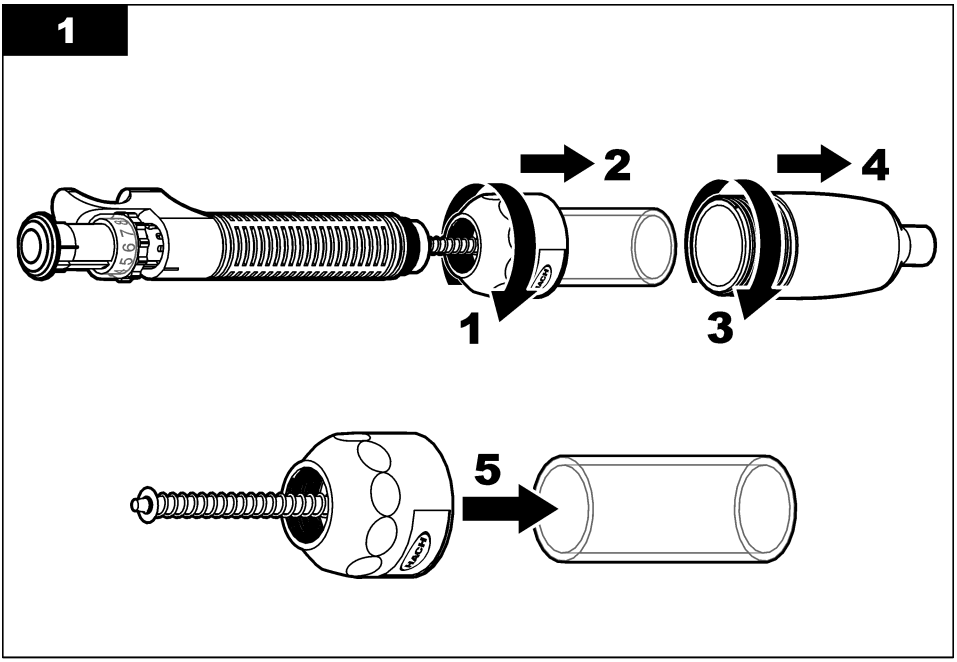
1
2
4
1
3
5

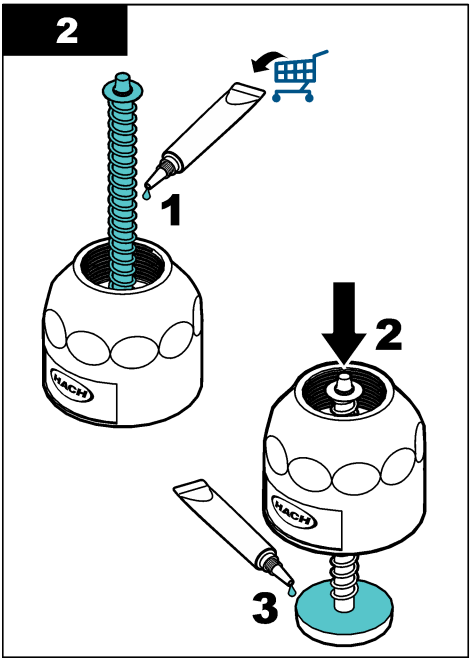
2
1
2
3

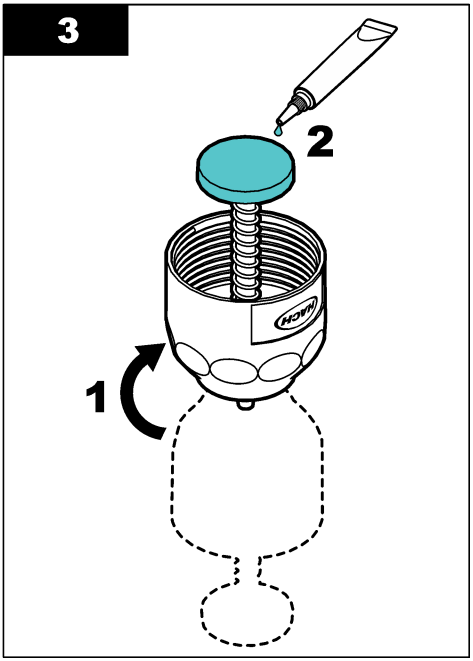
3
2
1

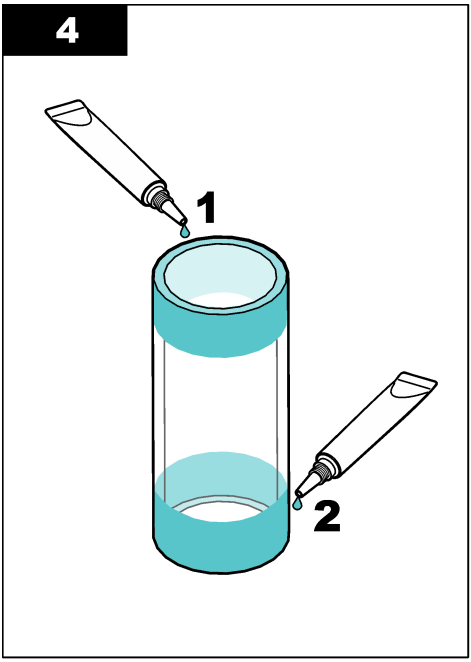
4
1
2

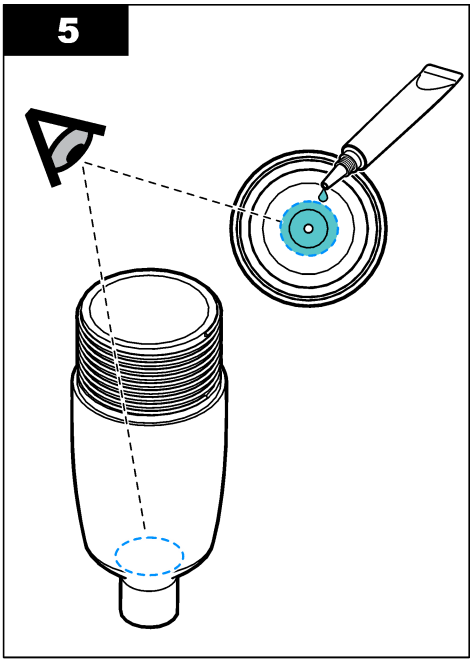
5

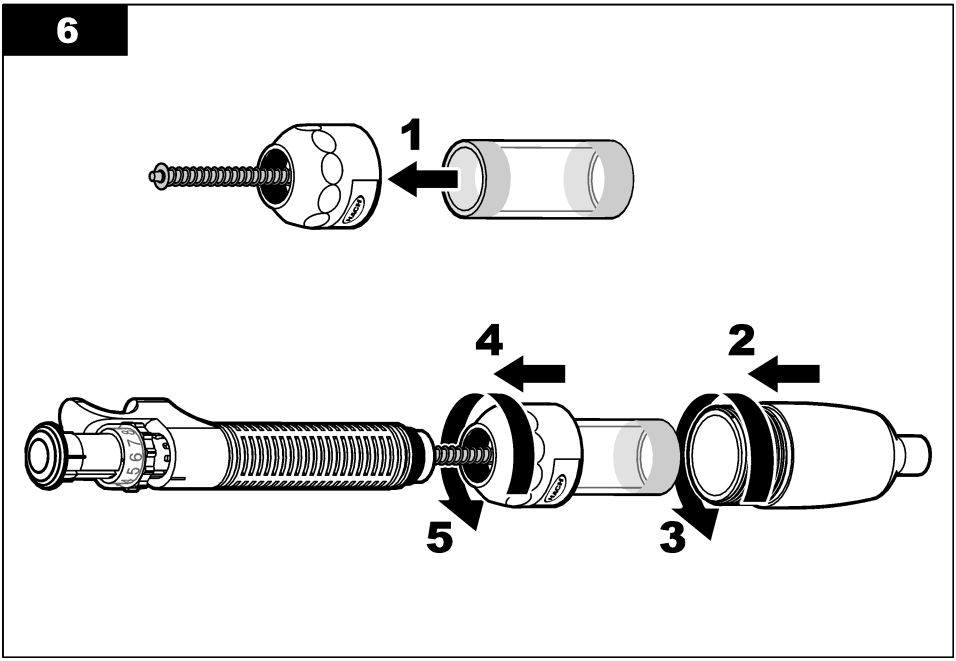
6
1
4
2
5
3

6.3 Calibration

Calibrate the pipet if the pipet is used at high altitudes or if the dispensed volume is not within the specified tolerance. The percent error increases at high altitudes. Refer to Figure 3. Use only distilled or deionized water at 20-25 °C (68-77 °F). The weight of each mL of distilled or deionized water is 1 gram.

1. Remove the turret cap and volume-setting ring to access the turret set screw. Refer to Figure 1 on page 3.
2. Loosen the turret set screw by one or two turns.
3. Put a narrow-necked container (for example, a 25-mL volumetric flask) on an analytical balance and zero the balance.
4. Use the TenSette pipet to add 1.0 mL of distilled or deionized water into the container. The weight of the water should be 1.0 g.
5. If the weight of the dispensed water at the 1.0 mL setting is more or less than 1.0 g, use a small screwdriver to turn the turret adjustment screw (Figure 1 on page 3) in small increments to adjust the volume. Turn the turret adjustment screw clockwise to increase the volume or counterclockwise to decrease the volume.
6. Zero the balance and add another 1.0 mL of deionized water into the container. If the weight of the water at the 1.0 mL setting is more or less than 1.0 g, turn the adjustment screw again. Continue to turn the adjustment screw until the dispensed water at the 1.0 mL setting weighs 1.0 g.
7. When the weight of the dispensed water at the 1.0 mL setting is 1.0 g, set the TenSette pipet to the 10.0 mL setting.
8. Zero the balance and add 10.0 mL of deionized water into the container. The weight of the dispensed water should be 10.0 g.
9. If the weight of the dispensed water at the 10.0 mL setting is more or less than 10.0 g, turn the turret adjustment screw in small increments to change the dispensed volume.
10. When the weight of the dispensed water at the 10.0 mL setting is 10.0 g, measure the weight at the 1.0 mL setting again.
11. When the weight of the dispensed water is correct for the 1.0 mL and the 10.0 mL settings, tighten the turret set screw.
12. Install the volume-setting ring and turret cap.

Figure 3 Percent error at different altitudes

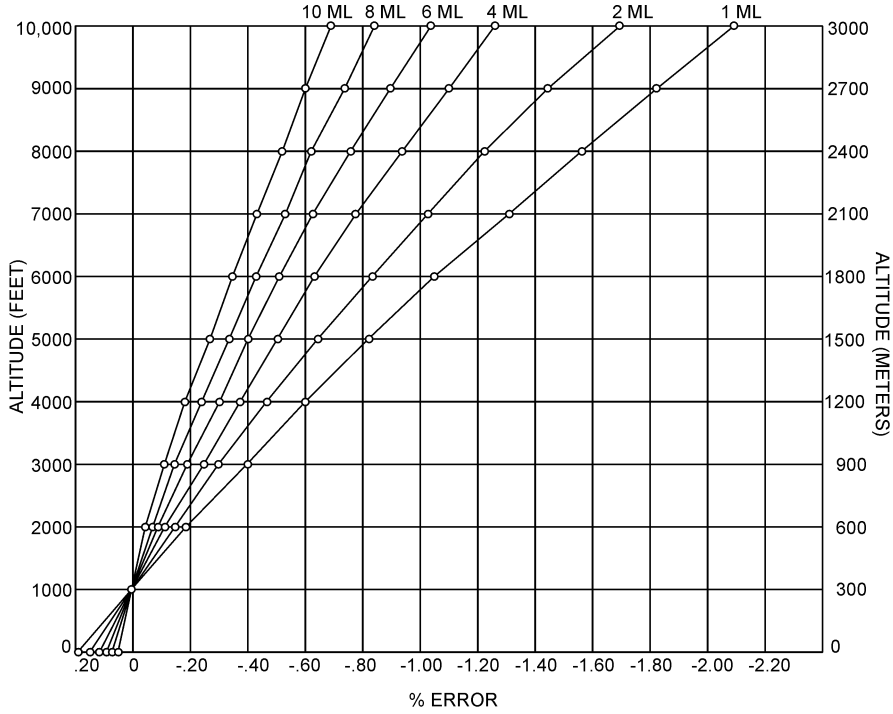

Section 7 Parts and accessories

⚠ WARNING

Personal injury hazard. Use of non-approved parts may cause personal injury, damage to the instrument or equipment malfunction. The replacement parts in this section are approved by the manufacturer.

Note: *Product and Article numbers may vary for some selling regions. Contact the appropriate distributor or refer to the company website for contact information.*

Consumables

Description	Quantity	Item no.
Pipet tips	50/pkg	2199796
Pipet tips	250/pkg	2199725
Pipet tips, sterile	50/pkg	2558996

Replacement parts

Description	Item no.
Cylinder, glass	1989800
Piston assembly	1972800

Replacement parts (continued)

Description	Item no.
Set screw, 8-32 x 0.188 inch	833811
Turret cap screw, 10-32 x 0.50 inch, flat head Phillips	565100
Turret cap with screw and volume-setting ring kit	2559710
Turret set screw, 6-32 × 0.125 inch	1972000

Accessories

Description	Item no.
Volumetric flask, glass, Class A, 25 mL	1457440
Stopcock grease, 150 g tube	56275

HACH COMPANY World Headquarters
P.O. Box 389, Loveland, CO 80539-0389 U.S.A.
Tel. (970) 669-3050
(800) 227-4224 (U.S.A. only)
Fax (970) 669-2932
orders@hach.com
www.hach.com

HACH LANGE GMBH
Willstätterstraße 11
D-40549 Düsseldorf, Germany
Tel. +49 (0) 2 11 52 88-320
Fax +49 (0) 2 11 52 88-210
info-de@hach.com
www.de.hach.com

HACH LANGE Sàrl
6, route de Compois
1222 Vésenaz
SWITZERLAND
Tel. +41 22 594 6400
Fax +41 22 594 6499

© Hach Company/Hach Lange GmbH, 2025.
All rights reserved. Printed in U.S.A.